WELLSPRING HOSPITAL
World Health Day

1： 10

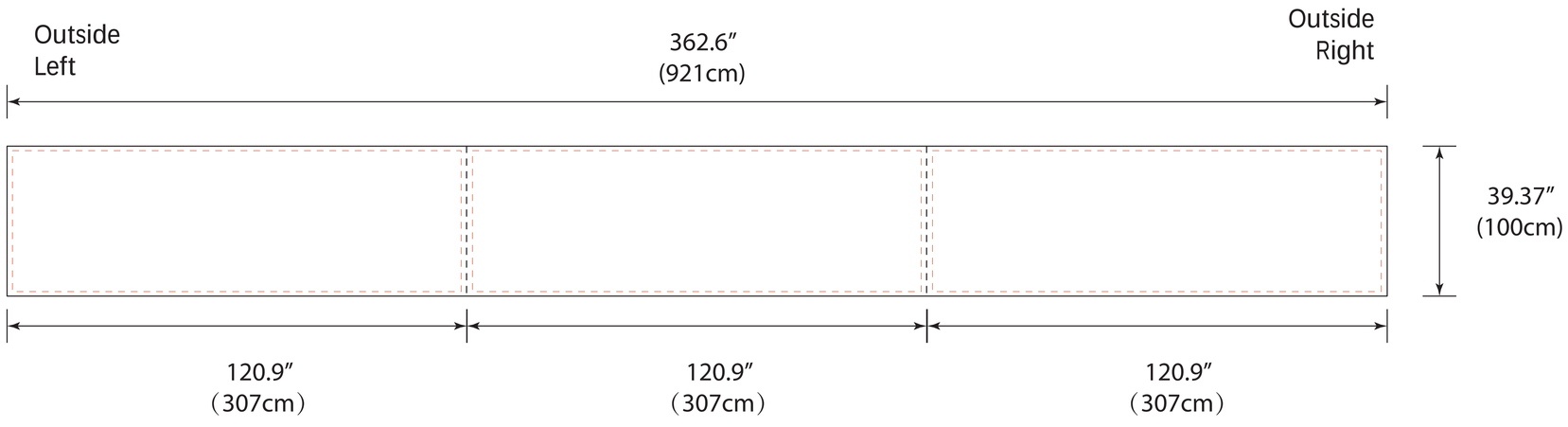
Outside Left
362.6″ (921cm)
Outside Right
39.37″ (100cm)
120.9″ (307cm)
120.9″ (307cm)
120.9″ (307cm)

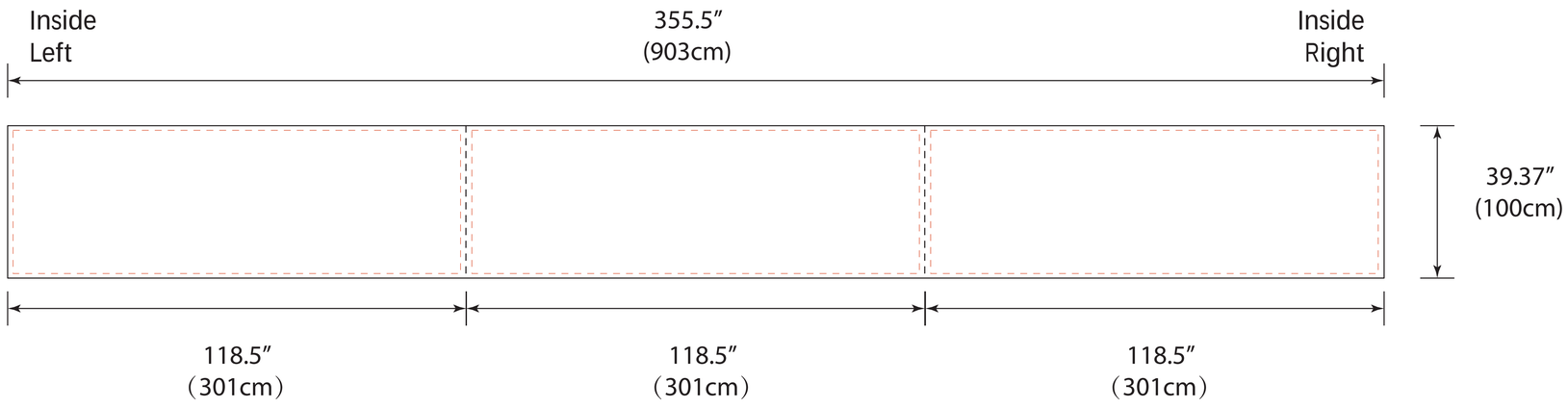
Inside Left
355.5″ (903cm)
Inside Right
39.37″ (100cm)
118.5″ (301cm)
118.5″ (301cm)
118.5″ (301cm)

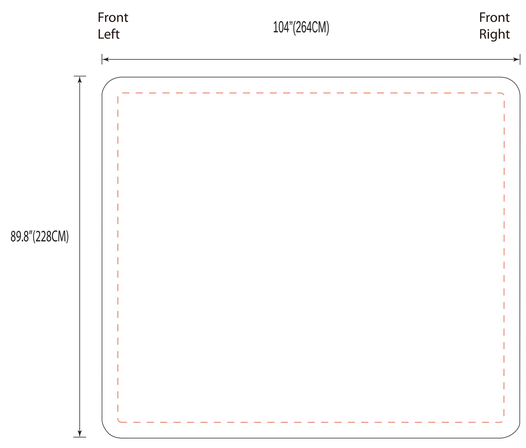
Front Left
104"(264CM)
Front Right
89.8"(228CM)

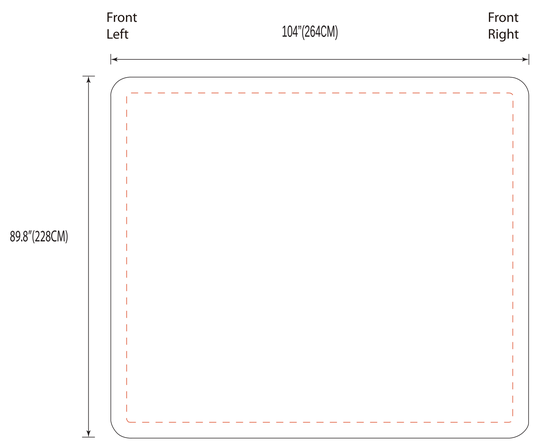
Front Left
104"(264CM)
Front Right
89.8"(228CM)

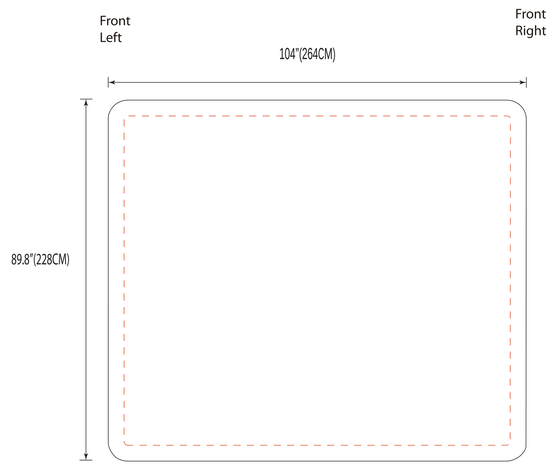
Front Left
104"(264CM)
Front Right
89.8"(228CM)

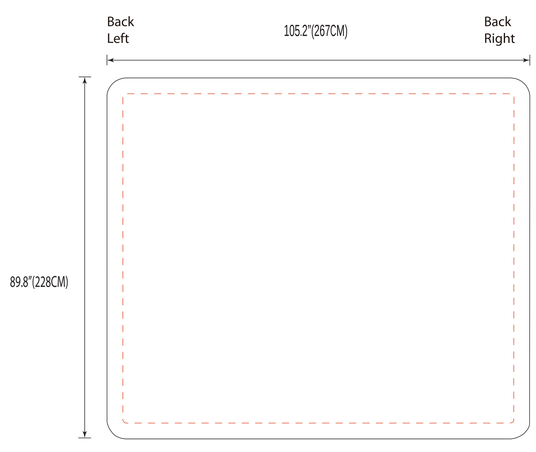
Back Left
105.2"(267CM)
Back Right
89.8"(228CM)

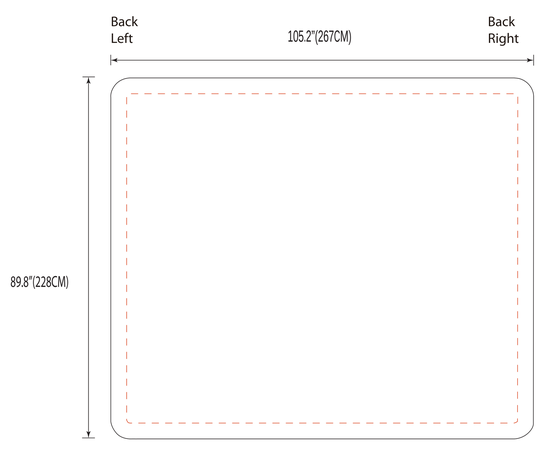
Back Left
105.2"(267CM)
Back Right
89.8"(228CM)

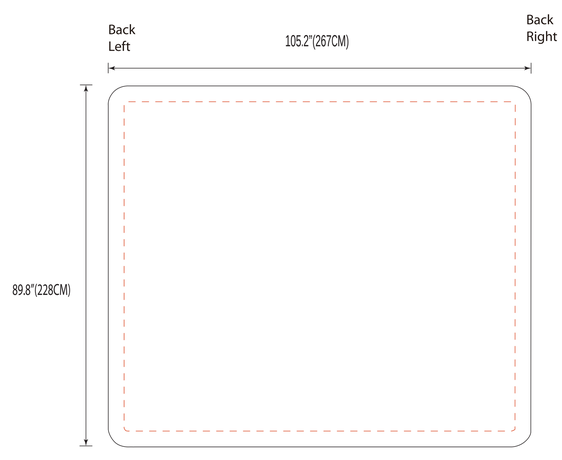
Back Left
105.2"(267CM)
Back Right
89.8"(228CM)