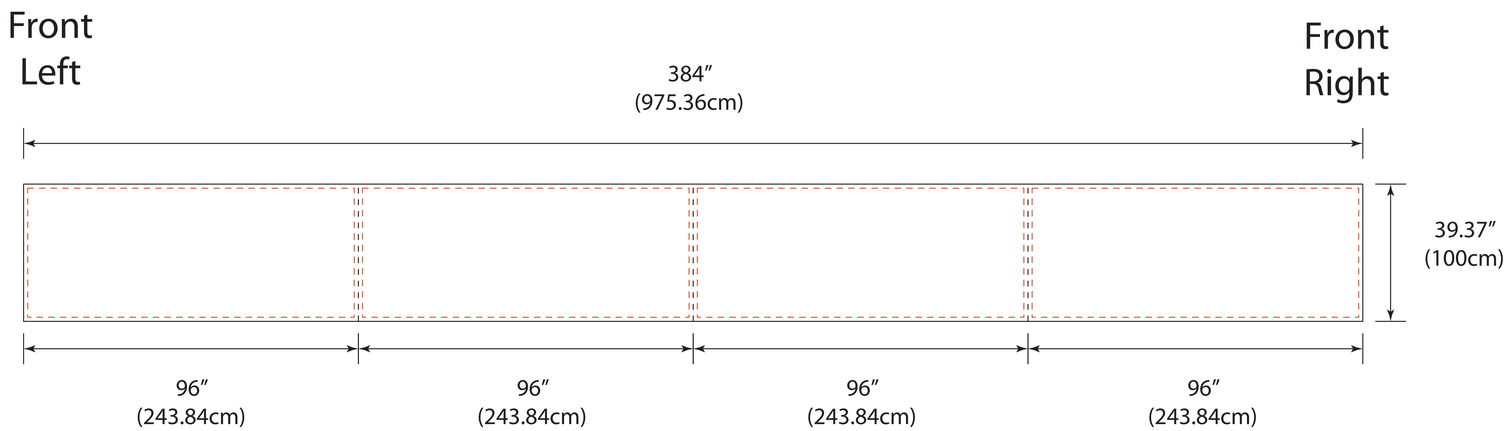
Front
Left
Front
Right
384″
(975.36cm)
39.37″
(100cm)
96″
(243.84cm)
96″
(243.84cm)
96″
(243.84cm)
96″
(243.84cm)

1： 10

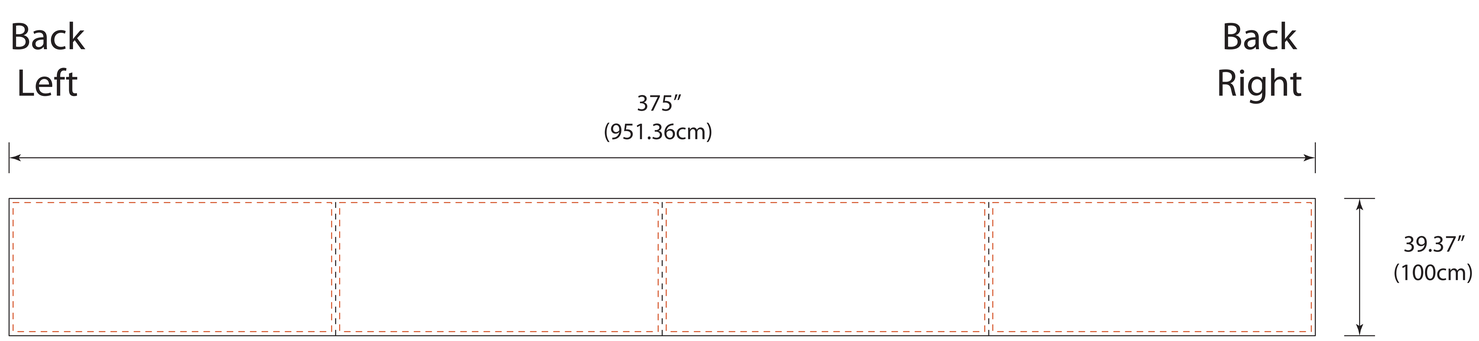
Back
Left
Back
Right
375″
(951.36cm)
39.37″
(100cm)

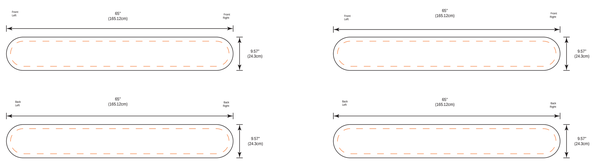

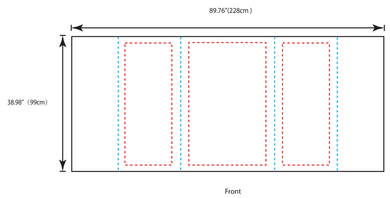
89.76″(228cm)
38.98″ (99cm)
Front

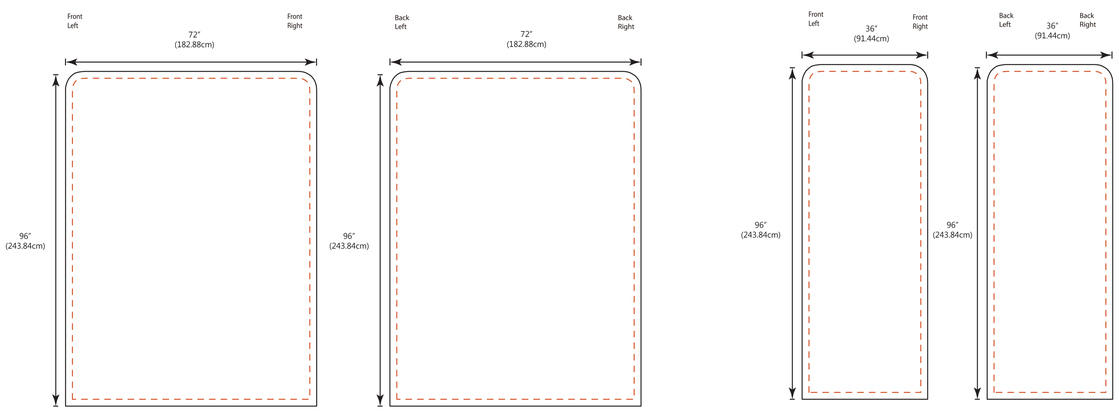
Front
Left
Front
Right
72″
(182.88cm)
96″
(243.84cm)
Back
Left
Back
Right
72″
(182.88cm)
96″
(243.84cm)
Front
Left
Front
Right
36″
(91.44cm)
96″
(243.84cm)
Back
Left
Back
Right
36″
(91.44cm)
96″
(243.84cm)

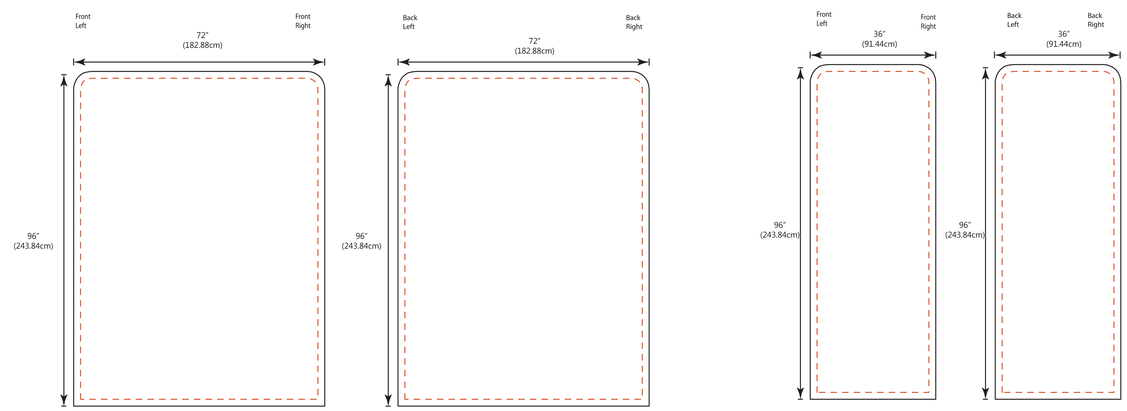
Front
Left
Front
Right
72″
(182.88cm)
96″
(243.84cm)
Back
Left
Back
Right
72″
(182.88cm)
96″
(243.84cm)
Front
Left
Front
Right
36″
(91.44cm)
96″
(243.84cm)
Back
Left
Back
Right
36″
(91.44cm)
96″
(243.84cm)