1 : 10

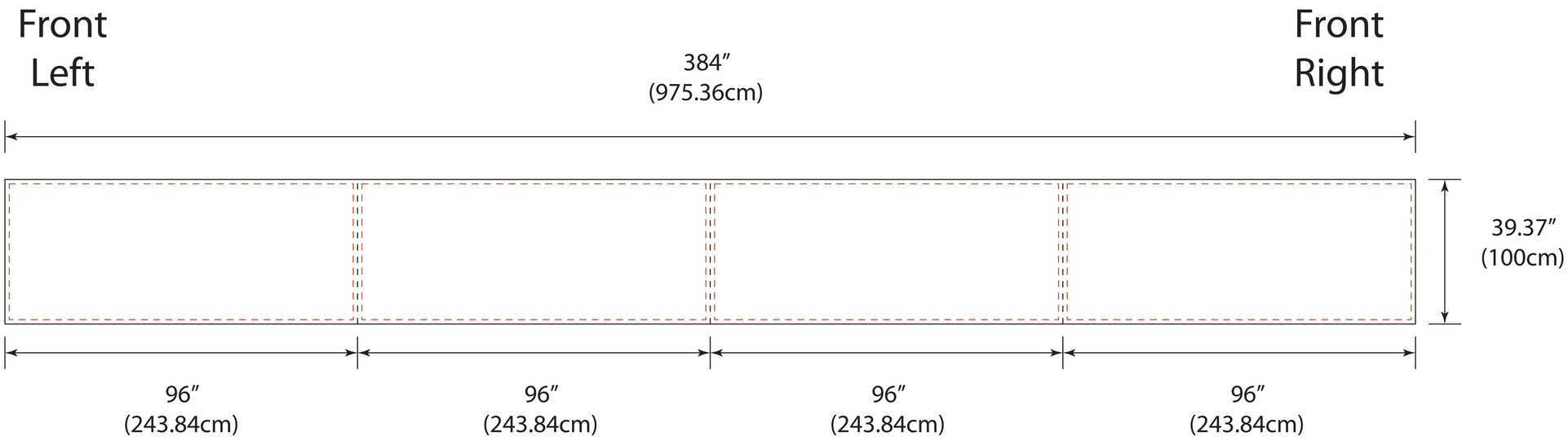
Front Left
Front Right
384″ (975.36cm)
39.37″ (100cm)
96″ (243.84cm)
96″ (243.84cm)
96″ (243.84cm)
96″ (243.84cm)

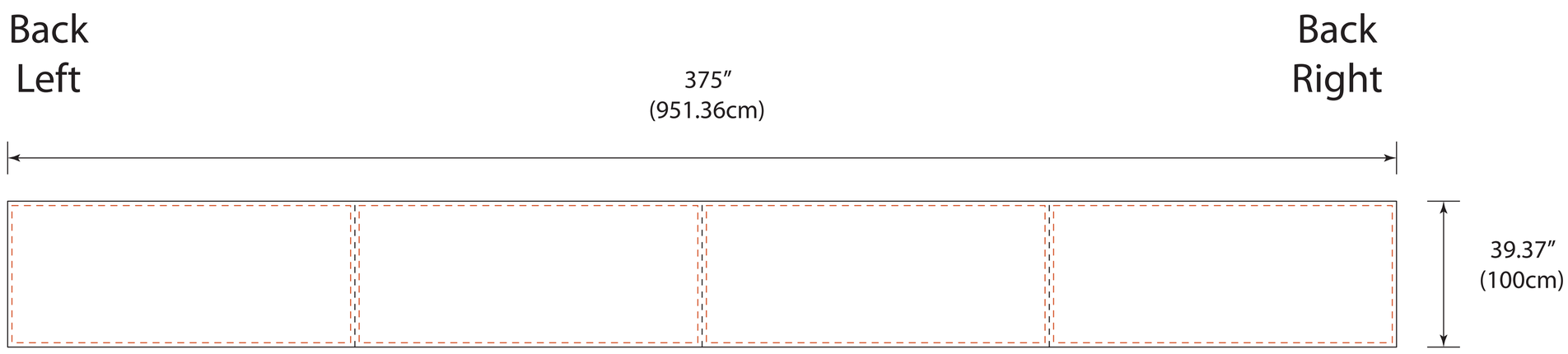
Back Left
Back Right
375″ (951.36cm)
39.37″ (100cm)

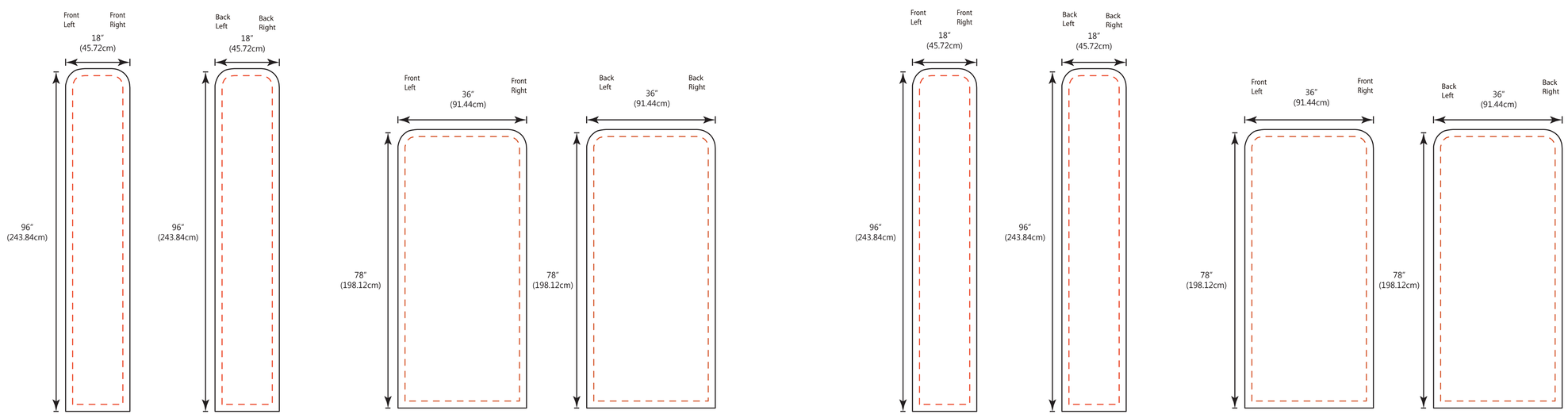
Front Left
Front Right
18″ (45.72cm)
96″ (243.84cm)
Back Left
Back Right
18″ (45.72cm)
96″ (243.84cm)
Front Left
Front Right
36″ (91.44cm)
78″ (198.12cm)
Back Left
Back Right
36″ (91.44cm)
78″ (198.12cm)
Front Left
Front Right
18″ (45.72cm)
96″ (243.84cm)
Back Left
Back Right
18″ (45.72cm)
96″ (243.84cm)
Front Left
Front Right
36″ (91.44cm)
78″ (198.12cm)
Back Left
Back Right
36″ (91.44cm)
78″ (198.12cm)

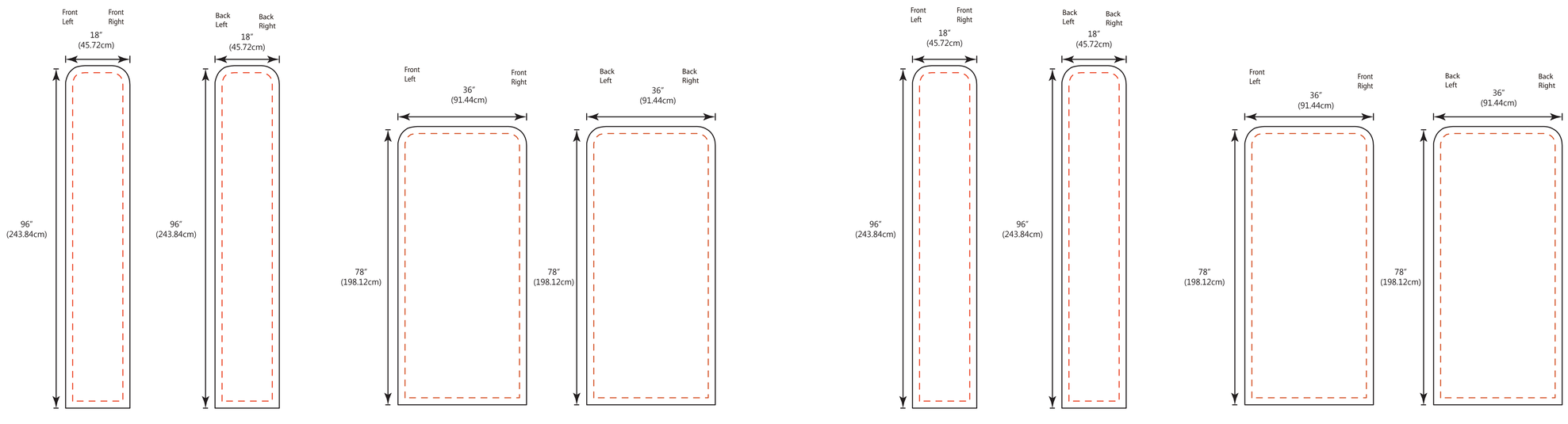
Front Left
Front Right
18″ (45.72cm)
96″ (243.84cm)
Back Left
Back Right
18″ (45.72cm)
96″ (243.84cm)
Front Left
Front Right
36″ (91.44cm)
78″ (198.12cm)
Back Left
Back Right
36″ (91.44cm)
78″ (198.12cm)
Front Left
Front Right
18″ (45.72cm)
96″ (243.84cm)
Back Left
Back Right
18″ (45.72cm)
96″ (243.84cm)
Front Left
Front Right
36″ (91.44cm)
78″ (198.12cm)
Back Left
Back Right
36″ (91.44cm)
78″ (198.12cm)