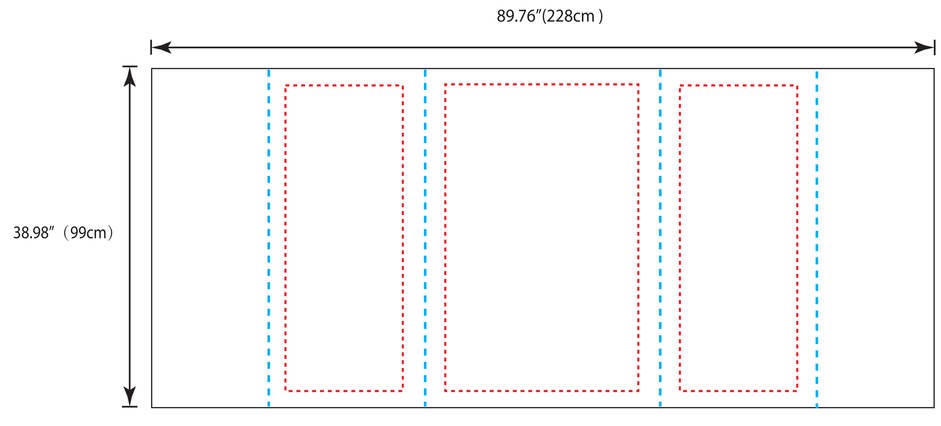

Front

1:2

Left

Front Left | Front Right | Back Left | Back Right

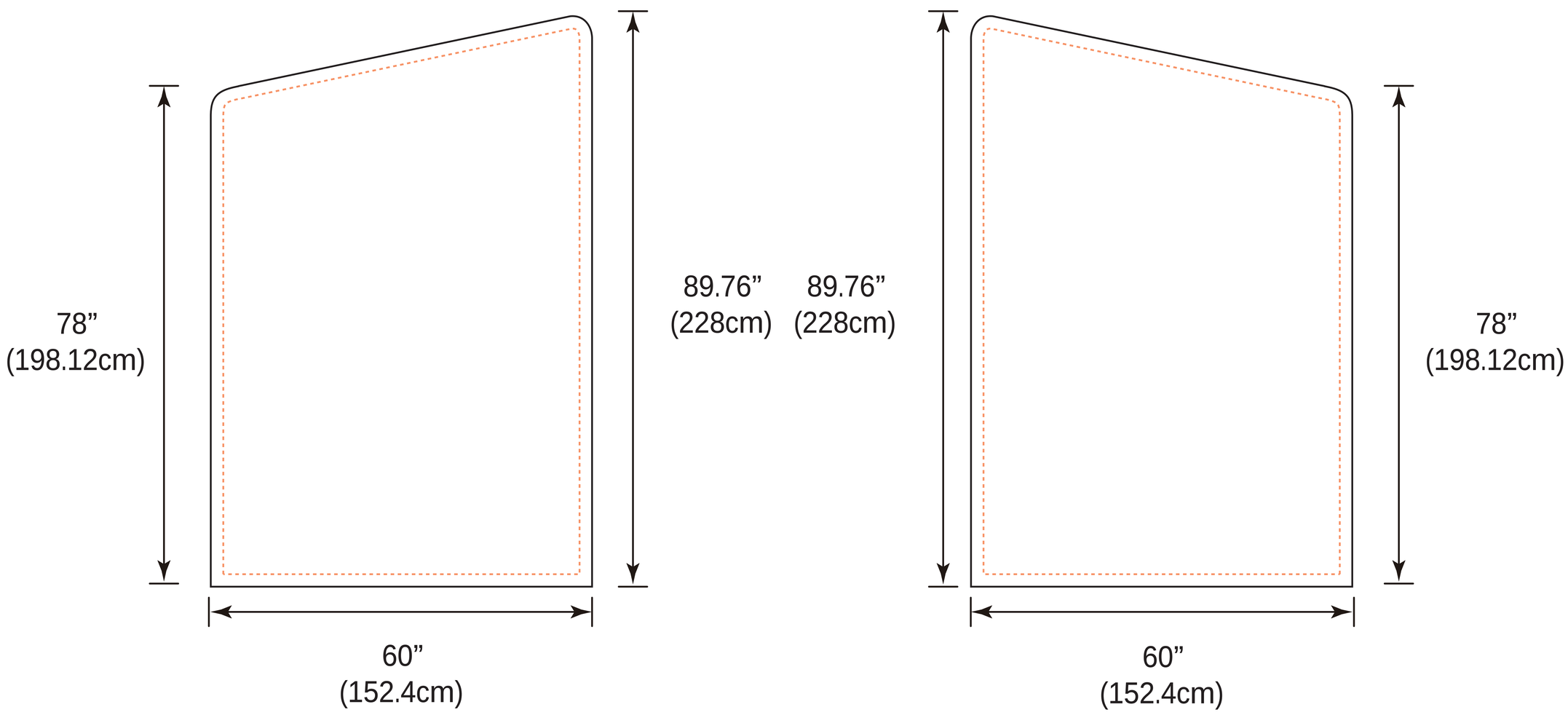

Right
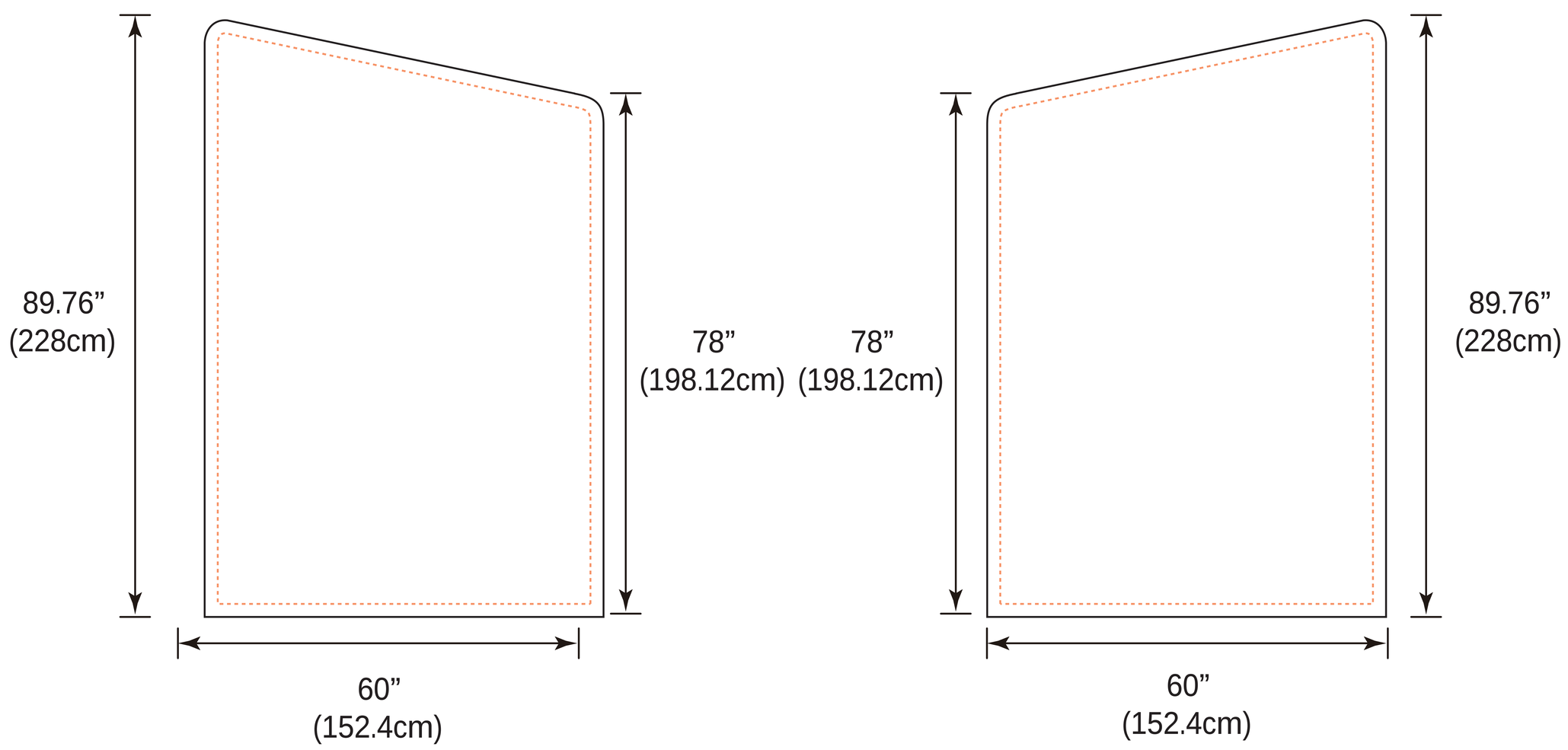
Front Left | Front Right | Back Left | Back Right