1:10

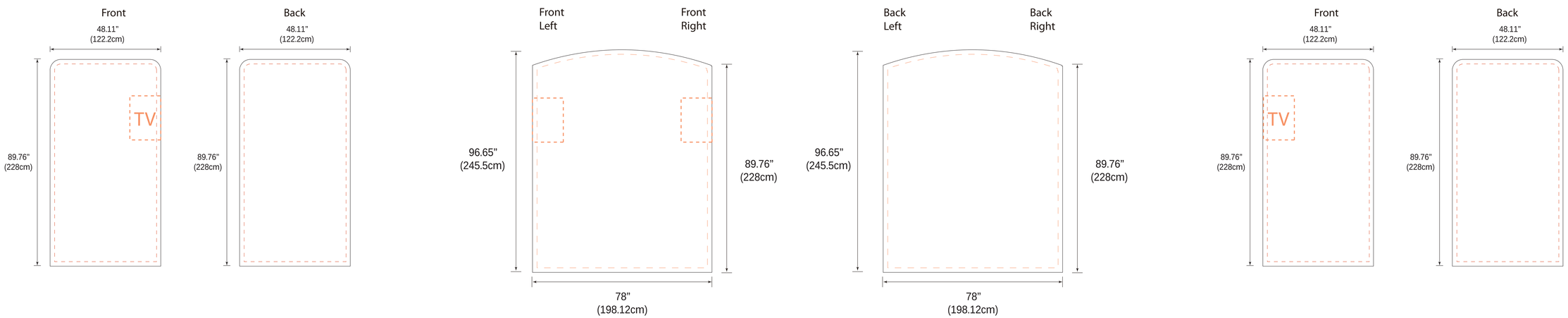
Front
48.11"
(122.2cm)
TV
89.76"
(228cm)
Back
48.11"
(122.2cm)
89.76"
(228cm)
Front
Left
Front
Right
96.65"
(245.5cm)
89.76"
(228cm)
78"
(198.12cm)
Back
Left
Back
Right
96.65"
(245.5cm)
89.76"
(228cm)
78"
(198.12cm)
Front
48.11"
(122.2cm)
TV
89.76"
(228cm)
Back
48.11"
(122.2cm)
89.76"
(228cm)

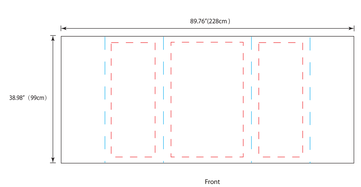
89.76"(228cm)
38.98"（99cm）
Front

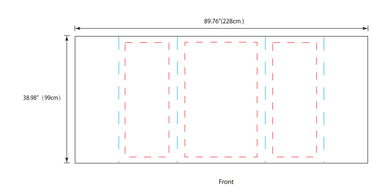
89.76"(228cm)
38.98"（99cm）
Front