YOUR
NEW WORLD
INTO THE
FUTURISTIC
DIGITAL
TECH

1:10

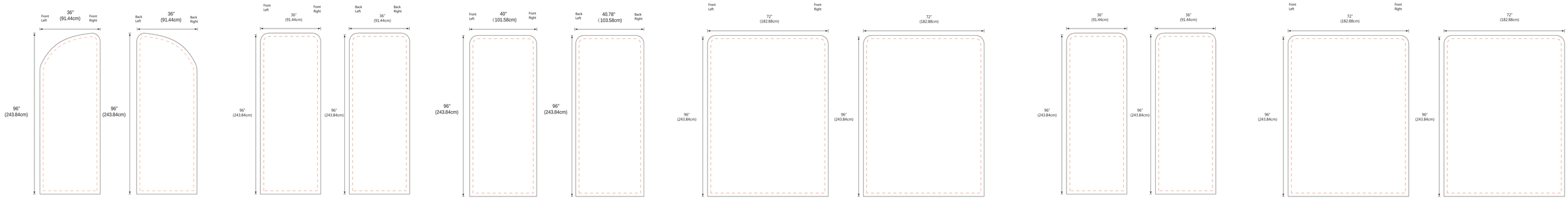
Front Left
36"
(91.44cm)
Front Right
96"
(243.84cm)
Back Left
36"
(91.44cm)
Back Right
96"
(243.84cm)
Front Left
36"
(91.44cm)
Front Right
96"
(243.84cm)
Back Left
36"
(91.44cm)
Back Right
96"
(243.84cm)
Front Left
40"
(101.58cm)
Front Right
96"
(243.84cm)
Back Left
40.78"
(103.58cm)
Back Right
96"
(243.84cm)
Front Left
72"
(182.88cm)
Front Right
96"
(243.84cm)
72"
(182.88cm)
96"
(243.84cm)
36"
(91.44cm)
96"
(243.84cm)
36"
(91.44cm)
96"
(243.84cm)
Front Left
72"
(182.88cm)
Front Right
96"
(243.84cm)
72"
(182.88cm)
96"
(243.84cm)

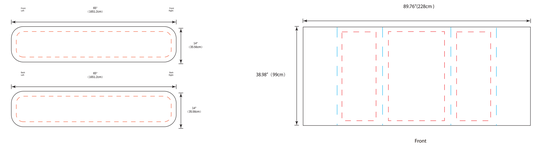
89.76"(228cm)
38.98" (99cm)
Front

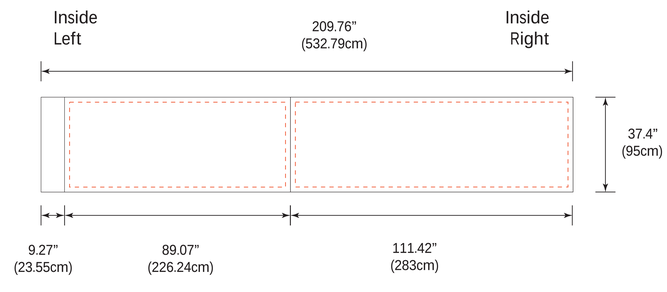
Inside
Left
209.76"
(532.79cm)
Inside
Right
37.4"
(95cm)
9.27"
(23.55cm)
89.07"
(226.24cm)
111.42"
(283cm)

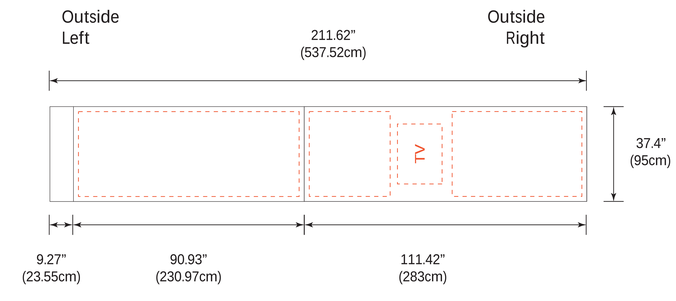
Outside
Left
211.62"
(537.52cm)
Outside
Right
TV
37.4"
(95cm)
9.27"
(23.55cm)
90.93"
(230.97cm)
111.42"
(283cm)