1:10

1:2

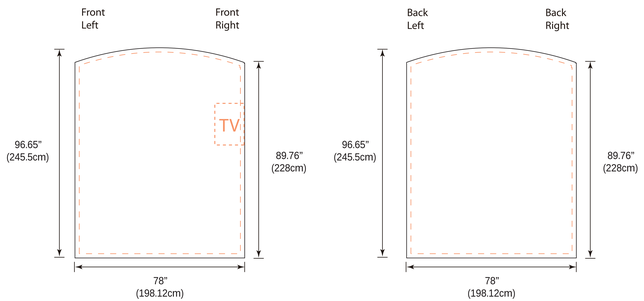
Front
Left
Front
Right
TV
96.65"
(245.5cm)
89.76"
(228cm)
78"
(198.12cm)
Back
Left
Back
Right
96.65"
(245.5cm)
89.76"
(228cm)
78"
(198.12cm)

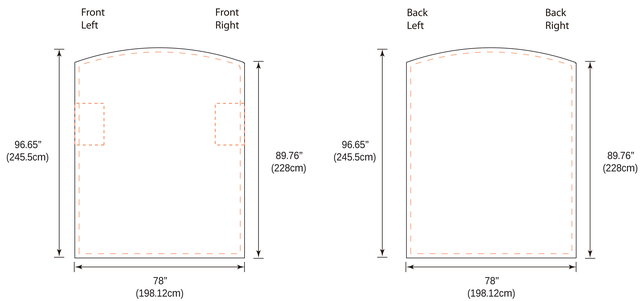
Front
Left
Front
Right
96.65"
(245.5cm)
89.76"
(228cm)
78"
(198.12cm)
Back
Left
Back
Right
96.65"
(245.5cm)
89.76"
(228cm)
78"
(198.12cm)

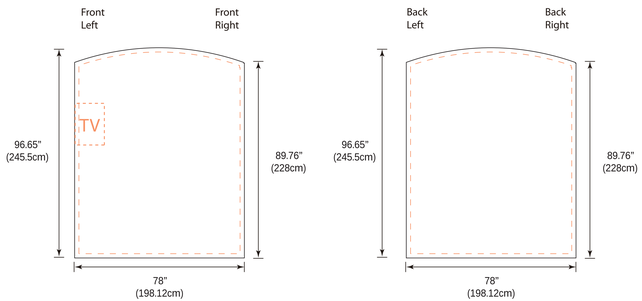
Front
Left
Front
Right
TV
96.65"
(245.5cm)
89.76"
(228cm)
78"
(198.12cm)
Back
Left
Back
Right
96.65"
(245.5cm)
89.76"
(228cm)
78"
(198.12cm)

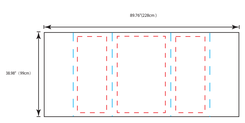
89.76"(228cm)
38.98" (99cm)
Front

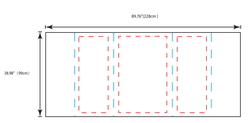
89.76"(228cm)
38.98" (99cm)
Front