1: 10

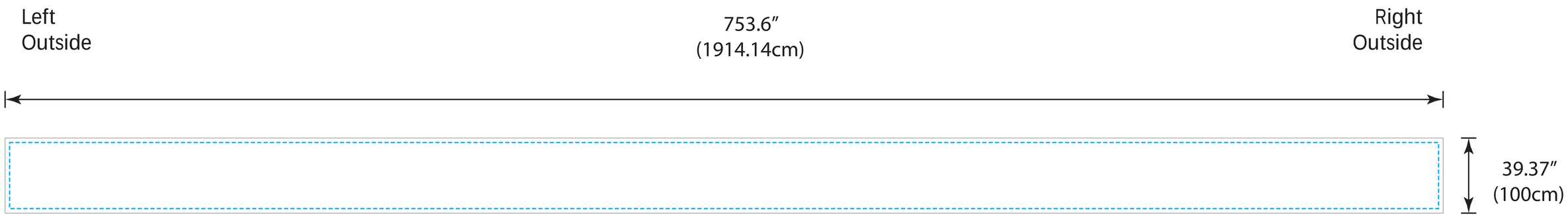
Left
Outside
753.6″
(1914.14cm)
Right
Outside
39.37″
(100cm)

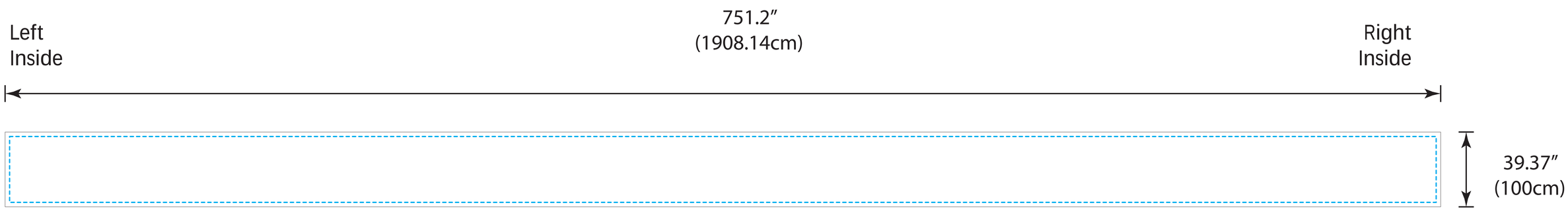
Left
Inside
751.2″
(1908.14cm)
Right
Inside
39.37″
(100cm)