1:2

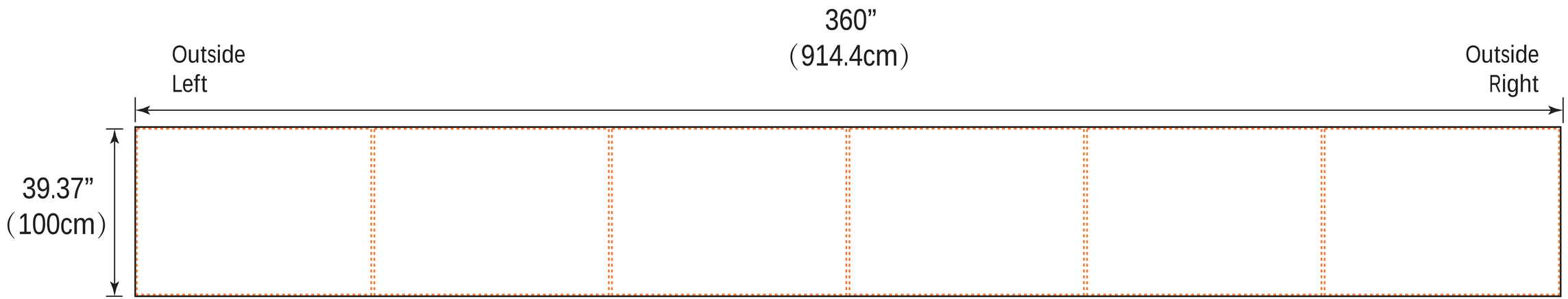
360”
(914.4cm)
Outside
Left
Outside
Right
39.37”
(100cm)

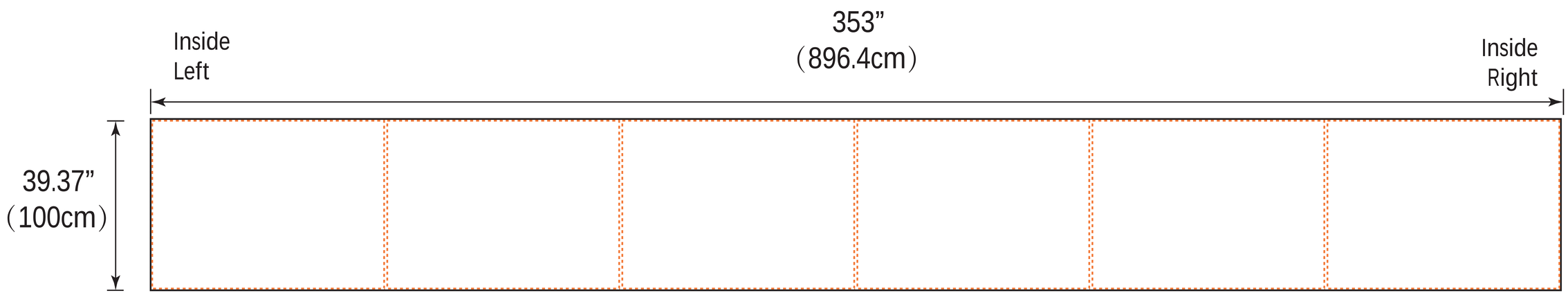
353”
(896.4cm)
Inside
Left
Inside
Right
39.37”
(100cm)