1: 10

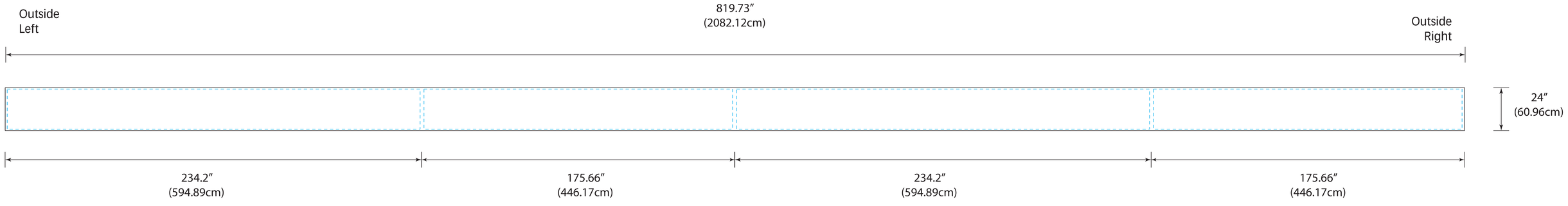
Outside
Left
819.73″
(2082.12cm)
Outside
Right
24″
(60.96cm)
234.2″
(594.89cm)
175.66″
(446.17cm)
234.2″
(594.89cm)
175.66″
(446.17cm)

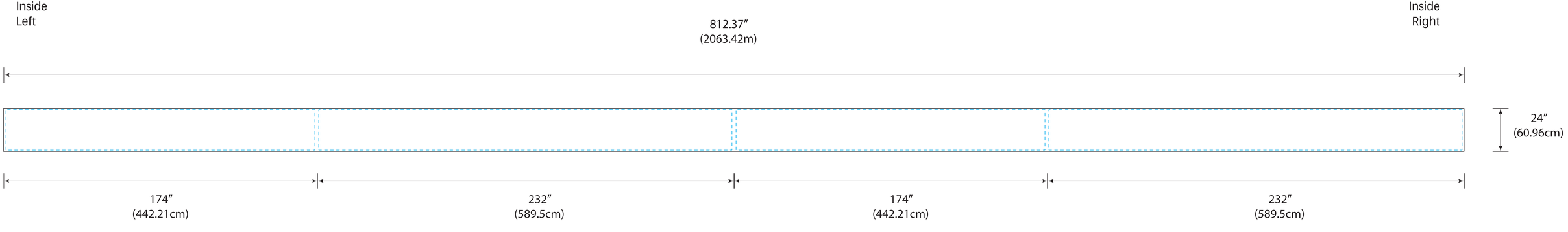
Inside
Left
812.37″
(2063.42m)
Inside
Right
24″
(60.96cm)
174″
(442.21cm)
232″
(589.5cm)
174″
(442.21cm)
232″
(589.5cm)